TECHNICAL DATA SHEET

BRANCH, REDUCED

60°

long spigot for butt- and electrofusion welding
welded from pipe, non-reinforced

PE100

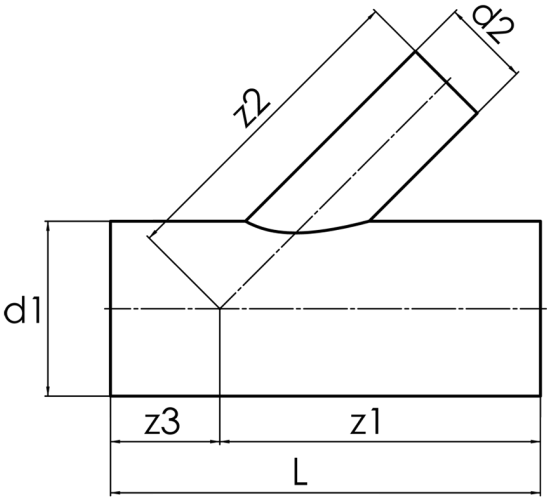

SDR 11

Art. No.	d1 [mm]	d2 [mm]	L [mm]	z1 [mm]	z2 [mm]	z3 [mm]	kg
42622182	225	180	600	365	365	235	9,40

Other materials, dimensions and pressure classes on request
tolerance + / - 2°

For questions, please feel free to contact us at: Tel. + 49 281 98 414 - 0

© STAR Piping Systems GmbH
All rights reserved