TECHNICAL DATA SHEET

Y-PIECE

90°

long spigot for butt- and electrofusion welding

PE100

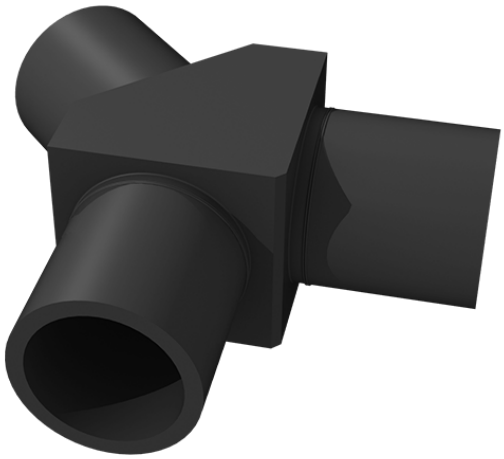

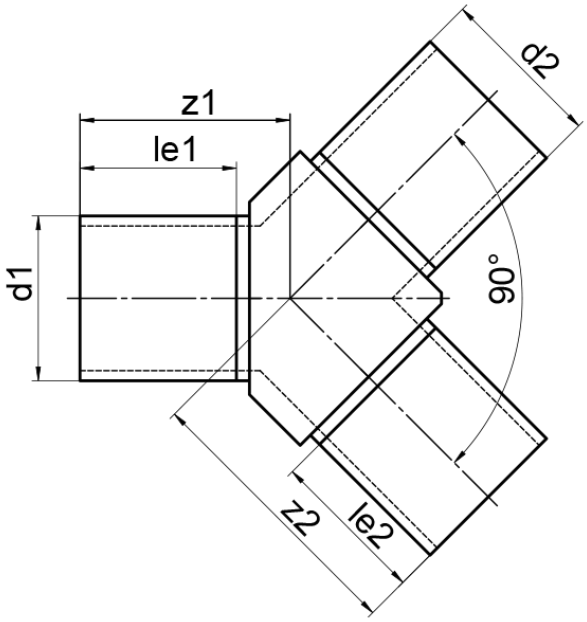

SDR 11

Art. No.	d1 [mm]	d2 [mm]	le1 [mm]	le2 [mm]	z1 [mm]	z2 [mm]	kg
42818182-Y90	180	180	150	150	220	305	9,44

other dimensions, materials and pressure classes on request

For questions, please feel free to contact us at: Tel. + 49 281 98 414 - 0

© STAR Piping Systems GmbH
All rights reserved