TECHNICAL DATA SHEET

ELECTROFUSION TEE, ECCENTRIC

4,0 mm pin
to completely drain the pipeline

PE100

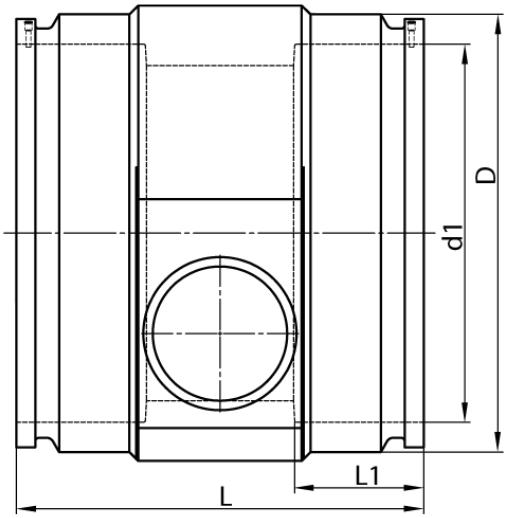

SDR 11

Art. No.	d1 [mm]	d2 [mm]	D [mm]	le2 [mm]	L [mm]	L1 [mm]	z2 [mm]	kg
42945092-EXEF	450	90	560	150	445	175	466	40,00

Other materials, dimensions and pressure classes on request

For questions, please feel free to contact us at: Tel. + 49 281 98 414 - 0

© STAR Piping Systems GmbH
All rights reserved