TECHNICAL DATA SHEET

ELECTROFUSION TEE, REDUCED

two seperate welding zones
4,0 mm pin

PE100

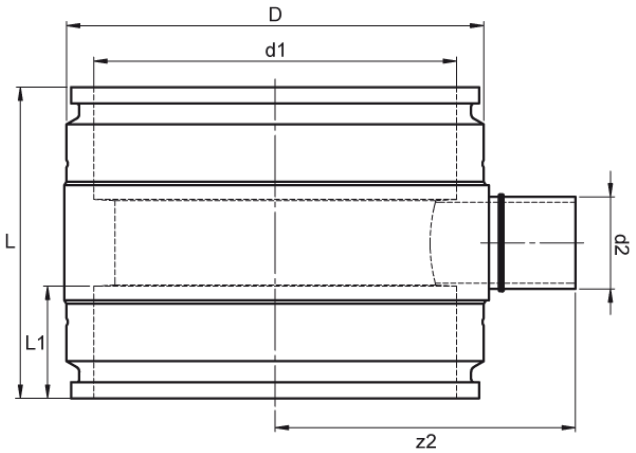

SDR 17

Art. No.	d1 [mm]	d2 [mm]	D [mm]	le2 [mm]	L [mm]	L1 [mm]	z2 [mm]	kg
42950251-EF	500	250	577	250	595	175	250	68,40

Other materials, dimensions and pressure classes on request

For questions, please feel free to contact us at: Tel. + 49 281 98 414 - 0

© STAR Piping Systems GmbH
All rights reserved