TECHNICAL DATA SHEET

STUB END

long spigot for butt- and electrofusion welding
pressure load according to DVS 2210-1 Supplement 3 Part 2.1

PE100

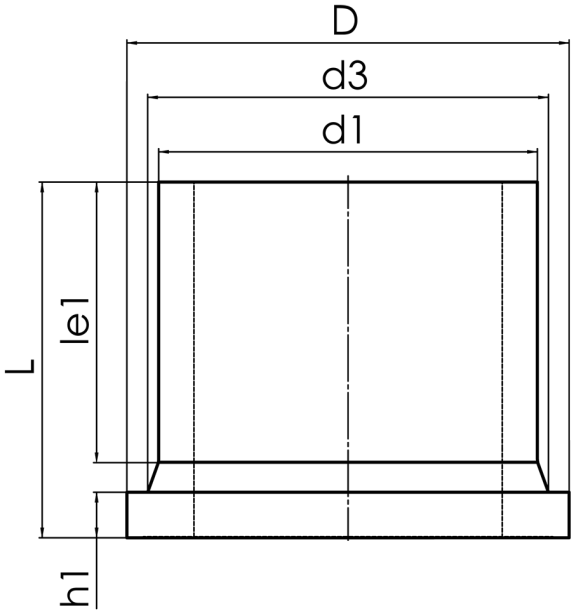

SDR 17

Art. No.	d1 [mm]	d3 [mm]	D [mm]	le1 [mm]	L [mm]	h1 [mm]	kg
43002221	225	235	268	125	190	24	2,10

Other materials and pressure classes on request

For questions, please feel free to contact us at: Tel. + 49 281 98 414 - 0

© STAR Piping Systems GmbH
All rights reserved