TECHNICAL DATA SHEET

REDUCER, ECCENTRIC

short spigot for butt welding
to completely drain the pipeline

PE100

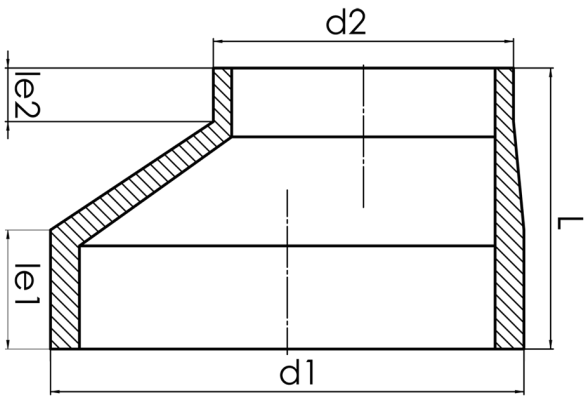

SDR 33

Art. No.	d1 [mm]	d2 [mm]	le1 [mm]	le2 [mm]	L [mm]	kg
44131223	315	225	72	40	170	1,40

Other materials, dimensions and pressure classes on request

For questions, please feel free to contact us at: Tel. + 49 281 98 414 - 0

© STAR Piping Systems GmbH
All rights reserved