TECHNICAL DATA SHEET

END CAP

long spigot for butt- and electrofusion welding

PE100

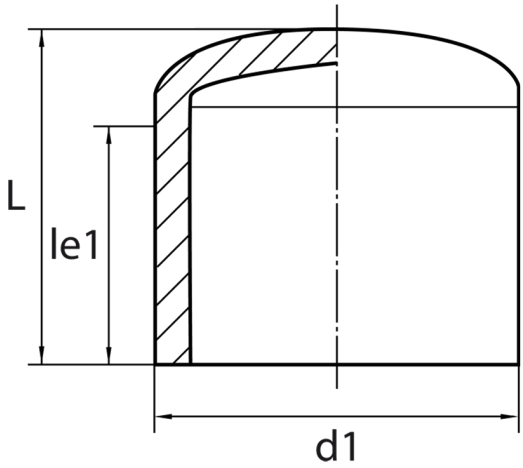

SDR 17

Art. No.	d1 [mm]	le1 [mm]	L [mm]	kg
44502091	90	82	100	0,17

Other materials and pressure classes on request

For questions, please feel free to contact us at: Tel. + 49 281 98 414 - 0

© STAR Piping Systems GmbH
All rights reserved