TECHNICAL DATA SHEET

SHAFT LINING

to be concret-casted into masonry
with mounted EPDM pipe collar seal

PE100

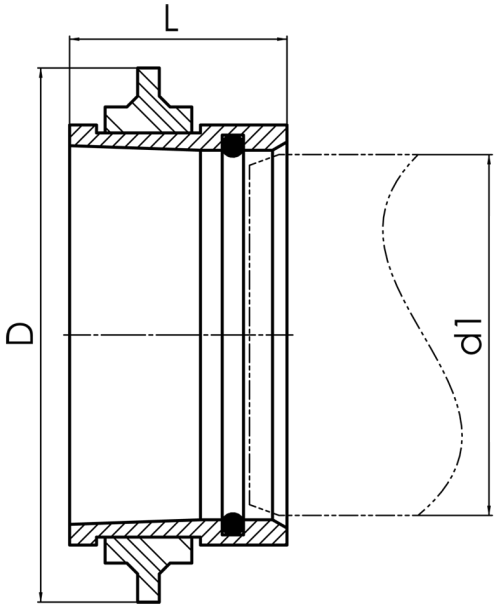

Art. No.	d1 [mm]	D [mm]	L [mm]	kg
46015350	355	500	150	3,50

For questions, please feel free to contact us at: Tel. + 49 281 98 414 - 0

© STAR Piping Systems GmbH
All rights reserved