ТЕХНИЧЕСКИЙ ПАСПОРТ

PP COMPRESSION FITTINGS PE UNIBLOK VALVE COUPLER FEMALE THREAD

suitable for assembling PE pipes
mechanical, detachable connection
reliable sealing with O-ring gasket
DVGW certified

PP

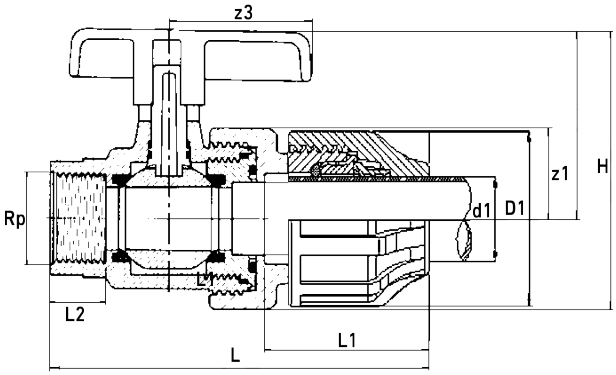

№ артикула	d1 [mm]	D1 [mm]	Rp [mm]	L [mm]	L1 [mm]	L2 [mm]	z1 [mm]	z2 [mm]	z3 [mm]	H [mm]	VE	kg
KL146025	25	54	1"	133	59	19	40	70	53	103	25	0,26

Minimum purchase: 40 piece

По вопросам, пожалуйста, свяжитесь с нами: Тел.
+ 49 281 98 414 - 0

© STAR Piping Systems GmbH
Все права защищены