ТЕХНИЧЕСКИЙ ПАСПОРТ

PP COMPRESSION FITTINGS TRANSITION ELBOW 90° FEMALE THREAD

suitable for assembling PE pipes
mechanical, detachable connection
reliable sealing with O-ring gasket
DVGW certified

PP

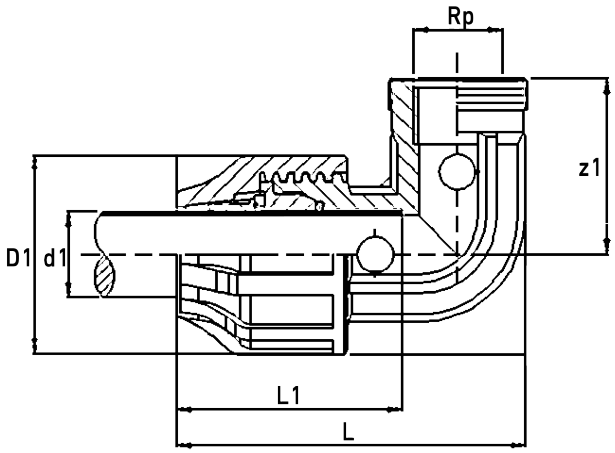

№ артикула	d1 [mm]	D1 [mm]	Rp [mm]	L [mm]	L1 [mm]	z1 [mm]	VE	kg
KL708063	63	117	2"	175,5	100,5	83,5	20	0,67

Minimum purchase: 20 piece

По вопросам, пожалуйста, свяжитесь с нами: Тел. + 49 281 98 414 - 0

© STAR Piping Systems GmbH
Все права защищены